MERCRUISER (350 MAG. EFI SKI (TBI) GM 350 V-8 1994-1996)
Serial Nbr Range: 0F215561 THRU 0F820706 ()

WIRING HARNESS (EFI)

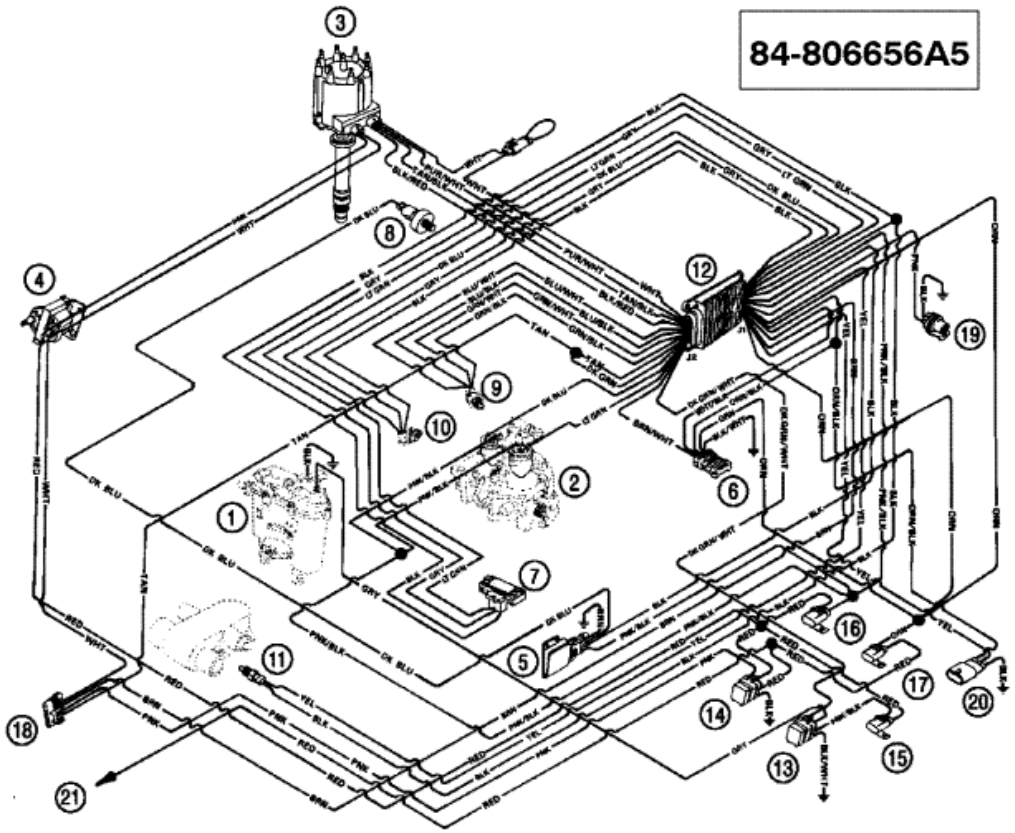

Parts List

Ref	Class	Part	Description	Qty	Comment	Footnote
-	84	806656A 5	WIRING HARNESS (EFI)			